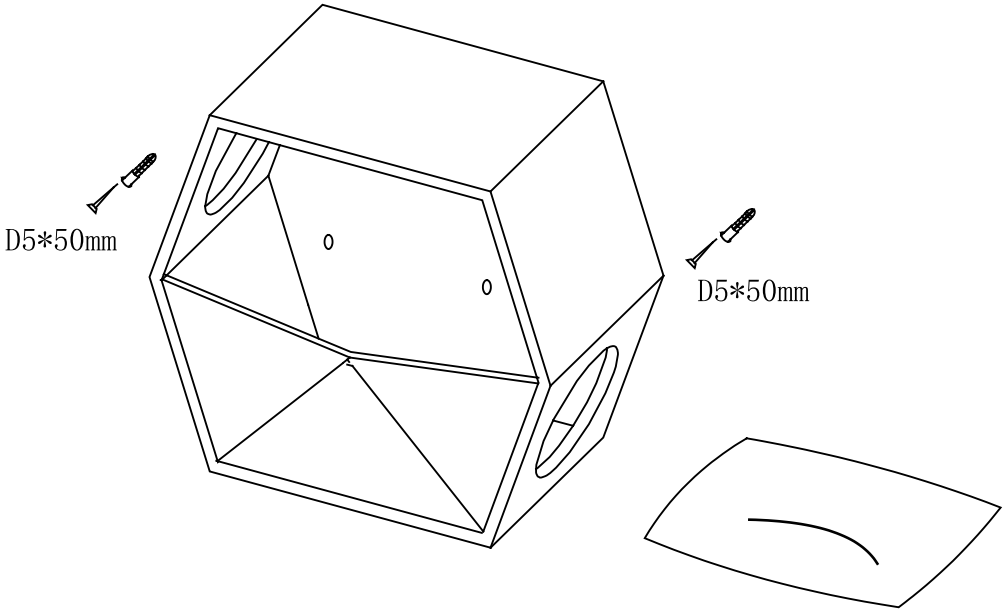

LA105456

4 054651 000403

Made in China

zooplus AG | Sonnenstraße 15 | 80331 München | Germany www.zooplus.com